Operating Instructions

# Pellet boiler PE1 Pellet 7-35


**Translation of the original German operating instructions for the operator**

Read and follow the instructions and safety information!

Technical changes, typographical errors and omissions reserved!

B1000517_en | Edition 12/09/2017

Froling GesmbH | A-4710 Grieskirchen, Industriestraße 12 | www.froeling.com

# Contents

# 1 General

Thank you for choosing a quality product from Froling. The product features a state-of-the-art design and conforms to all currently applicable standards and testing guidelines.

Please read and observe the documentation provided and always keep it close to the system for reference. Observing the requirements and safety information in the documentation makes a significant contribution to safe, appropriate, environmentally friendly and economical operation of the system.

The constant further development of our products means that there may be minor differences from the pictures and content. If you discover any errors, please let us know: doku@froeling.com.

Subject to technical change.

*Warranty and Guarantee Conditions*

Our sale and delivery conditions will be applicable. These conditions have been made available to customers, and customers have been made aware of them at the time of order completion.

You can also find the guarantee conditions on the enclosed guarantee certificate.

## 1.1 PE1 Pellet product overview

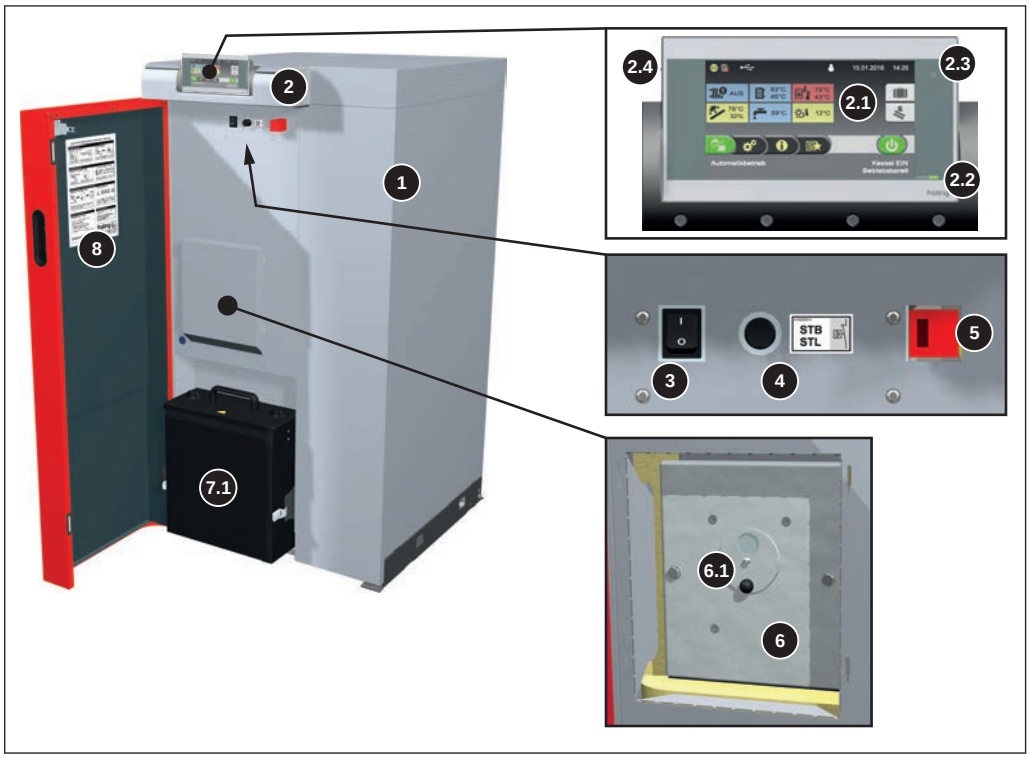


| | |
|---|---|
| 1 | PE1 Pellet pellet boiler |
| 2 | Boiler controller, Lambdatronic P 3200 |
| 2.1 | Large touch screen for displaying / modifying operating statuses and parameters |
| 2.2 | Status LED to display the operating status:<br>- GREEN constant: BOILER SWITCHED ON<br>- GREEN flashing (interval: 5 sec. OFF, 1 sec. ON): BOILER SWITCHED OFF<br>- ORANGE flashing: WARNING<br>- RED flashing: FAULT or ALARM |
| 2.3 | Brightness sensor for automatically adjusting the brightness of the display |
| 2.4 | USB port for connecting a USB stick for software updates |
| 3 | Main switch |
| 4 | High-limit thermostat (STL) |
| 5 | Door switch |
| 6 | Maintenance opening for combustion chamber (underneath the cover) |
| 6.1 | Inspection glass for checking combustion |
| 7.1 | Ash container for automatic ash removal |
| 8 | Quick start guide |

# 2 Safety

## 2.1 Hazard levels of warnings

This documentation uses warnings with the following hazard levels to indicate direct hazards and important safety instructions:

**⚠ DANGER**

*The dangerous situation is imminent and if measures are not observed it will lead to serious injury or death. You must follow the instructions!*

**⚠ WARNING**

*The dangerous situation may occur and if measures are not observed it will lead to serious injury or death. Work with extreme care.*

**⚠ CAUTION**

*The dangerous situation may occur and if measures are not observed it will lead to minor injuries.*

**NOTICE**

*The dangerous situation may occur and if measures are not observed it will lead to damage to property or pollution.*

## 2.2 Pictograms used

The following symbols are used in the documentation and/or on the boiler to show what is required and forbidden and to give warnings.

In accordance with the Machinery Directive, signs fitted directly within the danger area of the boiler indicate immediate hazards or safety procedures. These stickers must not be removed or covered.

| | | | |
|---|---|---|---|
|  | Refer to the operating instructions |  | Wear safety shoes |
|  | Wear protective gloves |  | Turn off the main switch |
|  | Keep the doors closed |  | Wear a dust mask |
|  | Work under the supervision of a second person |  | Lock |

| | | | |
|---|---|---|---|
|  | Unauthorised access prohibited |  | No fire, open flames or smoking |

| | | | |
|---|---|---|---|
|  | Warning - hot surface |  | Warning - hazardous electrical voltage |
|  | Warning - hazardous or irritant materials |  | Warning - automatic boiler startup |
|  | Warning of injury to fingers or hands, automatic fan |  | Warning of injury to fingers or hands, automatic screw |
|  | Warning of injury to fingers or hands, gear/chain drive |  | Warning of injury to fingers or hands, cutting edge |
|  | Hand injury warning |  | Warning of injury from being pulled into rotating shafts |
|  | Increased CO concentration warning |  | Slipping hazard warning |

## 2.3 General safety information

**DANGER**

**If the device is used incorrectly:**

***Incorrect use of the system can cause severe injury and damage.***

When operating the system:

- ❒ Observe the instructions and information in the manuals.
- ❒ Observe the details on procedures for operation, maintenance and cleaning, as well as troubleshooting in the individual manuals.
- ❒ Any work above and beyond this should be carried out by authorised heating engineers or by Froling customer services.

**WARNING**

**External influences:**

***Negative external influences, such as insufficient combustion air or non-standard fuel, can cause serious faults in combustion (e.g. spontaneous combustion of carbonisation gases or flash fires) which can in turn cause serious accidents!***

When operating the boiler, please note the following:

- ❒ Instructions and information regarding versions and minimum values, as well as standards and guidelines for heating components in the instructions must be observed.

**WARNING**

**Severe injuries and damage can be caused by an inadequate flue gas system.**

***Problems with the flue gas system, such as poor cleaning of the flue pipe or insufficient chimney draught, can cause serious faults in combustion (such as spontaneous combustion of carbonisation gases or flash fires).***

Take the following precautions:

- ❒ Optimum boiler performance can only be guaranteed if the flue gas system is functioning correctly.

## 2.4 Permitted uses

The Froling Pellet boiler PE1 Pellet is designed solely for heating domestic water. Only the fuels specified in the "Permitted fuels" section must be used.

⇨ See "Permitted fuels" [page 10]

The unit should only be operated when it is in full working order. It must be operated in accordance with the instructions, observing safety precautions, and you should ensure you are aware of the potential hazards. The inspection and cleaning intervals in the operating instructions must be observed. Ensure that any faults which might impair safety are rectified immediately.

The manufacturer or supplier is not liable for any damage resulting from non-permitted uses.

Only original spare parts or specific alternative spare parts authorised by the manufacturer may be used. Any kind of change or modification made to the product will invalidate the manufacturer's conformity with the applicable guideline(s). In such cases, the product will need to undergo new hazard evaluation procedures by the operator. The operator will then be fully responsible for the declaration of conformity according to the valid guideline(s) for the product and will need to issue a corresponding declaration for the device. This person will then assume all of the rights and responsibilities of a manufacturer.

### 2.4.1 The Clean Air Act 1993 and Smoke Control Areas

Under the Clean Air Act local authorities may declare the whole or part of the district of the authority to be a smoke control area. It is an offence to emit smoke from a chimney of a building, from a furnance or from any fixed boiler if located in a designated smoke control area. It is also an offence to acquire an „unauthorised fuel“ for use within a smoke control area unless it is used in an „exempt“ appliance („exempted“ from the controls which generally apply in the smoke control area). The Secretary of State for Environment, Food and Rural Affairs has powers under the Act to authorise smokeless fuels or exempt appliances for use in smoke control areas in England. In Scotland and Wales this power rests with Ministers in the devolved administrations for those countries. Separate legislation, the Clean Air (Northern Ireland) Order 1981, applies in Northern Ireland. Therefore it is a requirement that fuels burnt or obtained for use in smoke control areas have been „authorised“ in Regulations and that appliances used to burn solid fuel in those areas (other than „authorised“ fuels) have been exempted by an Order made and signed by the Secretary of State or Minister in the devolved administrations.

Further information on the requirements of the Clean Air Act can be found here: http://smokecontrol.defra.gov.uk

Your local authority is responsible for implementing the Clean Air Act 1993 including designation and supervision of smoke control areas and you can contact them for details of Clean Air Act requirements.

The Froling S1 Turbo 15 and S1 Turbo 20 have been recommended as suitable for use in smoke control areas when burning fuels as listed under "Permitted fuels".

The Froling PE1 Pellet 7, PE1 Pellet 10, PE1 Pellet 15, PE1 Pellet 20, PE1 Pellet 25, PE1 Pellet 30 and PE1 Pellet 35 have been recommended as suitable for use in smoke control areas when burning fuels as listed under "Permitted fuels".

### 2.4.2 Permitted fuels

#### *Wood pellets*

Wood pellets made from natural wood with a diameter of 6 mm

*Note on standards*

| | |
|---|---|
| EU: | Fuel acc. to EN ISO 17225 - Part 2: Wood pellets class A1 / D06 |
| and/or: | EN*plus* / DIN*plus* certification scheme |

**General note:**

Before refilling the store, check for pellet dust and clean if necessary.

**TIP:** Fit the PST pellet deduster for separating the dust particles contained in the return air

### 2.4.3 Non-permitted fuels

The use of fuels not defined in the "Permitted fuels" section, and particularly the burning of refuse, is not permitted.

**⚠ CAUTION**

**In case of use of non-permitted fuels:**

***Burning non-permitted fuels increases the cleaning requirements and leads to a build-up of aggressive sedimentation and condensation, which can damage the boiler and also invalidates the guarantee. Using non-standard fuels can also lead to serious problems with combustion.***

For this reason, when operating the boiler:

❒ Only use permitted fuels

## 2.5 Qualification of operating staff

**⚠ CAUTION**

**If unauthorised persons enter the installation room / boiler room:**

***Risk of personal injury and damage to property***

❒ The operator is responsible for keeping unauthorised persons, in particular children, away from the system.

Only trained operators are permitted to operate the unit. The operator must also have read and understood the instructions in the documentation.

## 2.6 Protective equipment for operating staff

You must ensure that staff have the protective equipment specified by accident prevention regulations.

- For operation, inspection and cleaning:
  - suitable work wear
  - protective gloves
  - sturdy shoes

## 2.7 Design information

It is forbidden to carry out modifications to the boiler or to change or deactivate safety equipment.

Always comply with all fire, building, and electrical regulations when installing or operating the boiler system, and follow the operating instructions and mandatory regulations that apply in the country in which the boiler is operated.

### 2.7.1 Installation and approval of the heating system

The boiler should be operated in a closed heating system. The following standards govern the installation:

*Note on standards*

EN 12828 - Heating Systems in Buildings

**NOTICE! Each heating system must be officially approved.**

The appropriate supervisory authority (inspection agency) must always be informed when installing or modifying a heating system, and authorisation must be obtained from the building authorities:

**Austria:** report to the construction authorities of the community or magistrate

**Germany:** report new installations to an approved chimney sweep / the building authorities.

### 2.7.2 General information for installation room (boiler room)

*Boiler room characteristics*

- The floor must be even, clean and dry and have an adequate load-bearing capacity.
- There must not be a potentially explosive atmosphere in the boiler room as the boiler is not suitable for use in potentially explosive environments.
- The boiler room must be frost-free.
- The boiler does not provide any light, so the customer must ensure sufficient lighting in the boiler room in accordance with national workplace design regulations.
- When using the boiler above 2000 metres above sea level you should consult the manufacturer.
- Danger of fire due to flammable materials.
  The floor of the boiler room must not be flammable. No flammable materials should be stored near the boiler. Flammable objects (e.g. clothing) must not be put on the boiler to dry.
- Damage due to impurities in combustion air.
  Do not use any solvents or cleaning agents containing chlorine and hydrogen halides in the room where the boiler is installed (e.g. chlorination units for swimming pools).
- Keep the air suction opening of the boiler free of dust.

- The system must be protected against the chewing or nesting of animals (e.g. rodents etc.).

### *Ventilation of the boiler room*

Ventilation air for the boiler room should be taken from and expelled directly outside, and the openings and air ducts should be designed to prevent weather conditions (foliage, snowdrifts, etc.) from obstructing the air flow.

Unless otherwise specified in the applicable building regulations for the boiler room, the following standards apply to the design and dimensions of the air ducts:

*Note on standards*

ÖNORM H 5170 - Construction and fire protection requirements
TRVB H118 - Technical directives on fire protection/prevention

## 2.7.3 Requirements for central heating water

Unless contrary to other national regulations, the latest versions of the following standards and guidelines apply:

| | | | |
|---|---|---|---|
| Austria: | ÖNORM H 5195 | Switzerland: | SWKI BT 102-01 |
| Germany: | VDI 2035 | Italy: | UNI 8065 |

Observe the standards and also follow the recommendations below:

❒ Aim for a pH value of between 8.2 and 10.0. If the central heating water comes into contact with aluminium, the pH value must be between 8.0 and 8.5
❒ Use prepared water which complies with the standards cited above for filling and makeup water
❒ Avoid leaks and use a closed heating system to maintain water quality during operation
❒ When filling with make-up water, always bleed the filling hose before connecting, in order to prevent air from entering the system

**Advantages of prepared water:**

- Complies with the applicable standards
- Less of a drop in output due to reduced limescale build-up
- Less corrosion due to fewer aggressive substances
- Long-term cost savings thanks to improved energy efficiency

**Limit values for filling and make-up water:**

| | Austria | Germany | Switzerland |
|---|---|---|---|
| Total hardness | ≤ 1.0 mmol/L | ≤ 2.0 mmol/L | < 0.1 mmol/L |
| Conductivity | - | < 100µS/cm | < 100 µS/cm |
| pH value | 6.0 – 8.5 | 6.5 – 8.5 | 6.0 – 8.5 |
| Chloride | < 30 mg/L | < 30 mg/L | < 30 mg/L |

**Additional requirements for Switzerland:**

The filling and make-up water must be demineralised (fully purified)

- The water must not contain any ingredients that could settle and accumulate in the system
- This makes the water non-electroconductive, which prevents corrosion
- It also removes all the neutral salts such as chloride, sulphate and nitrate which can weaken corrosive materials in certain conditions

If some of the system water is lost, e.g. during repairs, the make-up water must also be demineralised. It is not enough to soften the water. The heating system must be professionally cleaned and rinsed before filling the units.

**Inspection:**

- After eight weeks, the pH value of the water must be between 8.2 and 10.0. If the central heating water comes into contact with aluminium, the pH value must be between 8.0 and 8.5
- Yearly. Values must be recorded by the owner

## 2.7.4 Notes for using pressure maintenance systems

Pressure maintenance systems in hot-water heating systems keep the required pressure within predefined limits and balance out volume variations caused by changes in the hot-water temperature. Two main systems are used:

*Compressor-controlled pressure maintenance*

In compressor-controlled pressure maintenance units, a variable air cushion in the expansion tank is responsible for volume compensation and pressure maintenance. If the pressure is too low, the compressor pumps air into the tank. If the pressure is too high, air is released by means of a solenoid valve. The systems are built solely with closed-diaphragm expansion tanks to prevent the damaging introduction of oxygen into the heating water.

*Pump-controlled pressure maintenance*

A pump-controlled pressure maintenance unit essentially consists of a pressure-maintenance pump, relief valve and an unpressurised receiving tank. The valve releases hot water into the receiving tank if the pressure is too high. If the pressure drops below a preset value, the pump draws water from the receiving tank and feeds it back into the heating system. Pump-controlled pressure maintenance systems with **open expansion tanks** (e.g. without a diaphragm) introduce ambient oxygen via the surface of the water, exposing the connected system components to the risk of corrosion. These systems offer no oxygen removal for the purposes of corrosion control as required by VDI 2035 and **in the interests of corrosion protection should not be used**.

### 2.7.5 Use with storage tank

**NOTICE**

**In principle it is not necessary to use a storage tank for the system to run smoothly. However, we recommend that you use the system with a storage tank, as this ensures a continuous supply of fuel in the ideal output range of the boiler.**

For the correct dimensions of the storage tank and the line insulation (in accordance with ÖNORM M 7510 or guideline UZ37) please consult your installer or Froling.

⇨ See "Addresses" [page 38]

### 2.7.6 Chimney connection/chimney system

EN 303-5 specifies that the entire flue gas system must be designed to prevent, wherever possible, damage caused by seepage, insufficient feed pressure and condensation. Please note in this respect that flue gas temperatures lower than 160K above room temperature can occur in the permitted operating range of the boiler.

**NOTICE! Please see the technical data contained in the assembly instructions for further information about standards and regulations as well as the flue gas temperatures when clean and the other flue gas values!**

## 2.8 Safety Devices


| | |
|---|---|
| 2.1 | **BOILER OFF** *(switches off the boiler to prevent overheating)*<br>❒ Tap “Boiler OFF"<br>➥ Automatic mode is switched off<br>➥ Control system follows the boiler shutdown procedure<br>➥ Pumps continue to run |
| 3 | **MAIN SWITCH** *(switches off the power supply)*<br>Before carrying out work on/in the boiler:<br>❒ Tap “Boiler OFF"<br>➥ Automatic mode is switched off<br>➥ Control system follows the boiler shutdown procedure<br>❒ Switch off the main switch and let the boiler cool down |
| 4 | **SAFETY TEMPERATURE LIMITER (STL)** *(protection against overheating)*<br>The STL (high-limit thermostat) switches off the combustion system when the boiler reaches 100°C. The pumps continue to run. Once the temperature falls below approx. 75°C, the STL can be reset mechanically. |
| 5 | **DOOR SWITCH** *(protection against access to moving components)*<br>If the insulated door opens while the boiler is operating, all of the units stop to prevent injuries at moving components. If the insulated door remains open for more than 10 seconds, the boiler is switched off automatically. |
| SV | **SAFETY VALVE** *(protection against overheating/excess pressure)*<br>When the boiler pressure reaches a maximum of 3 bar, the safety valve opens and the heated water is blown off in the form of steam. |

## 2.9 Residual risks


**⚠ WARNING**

**When touching hot surfaces:**

***Severe burns are possible on hot surfaces and the flue gas pipe!***

When work is carried out on the boiler:

- ❒ Shut down the boiler in a controlled way (operating status "Boiler off") and allow it to cool down
- ❒ Protective gloves must generally be worn for work on the boiler, and it should only be operated using the handles provided
- ❒ Insulate the flue pipes or simply avoid touching them during operation.


**⚠ WARNING**

**When inspecting and cleaning the boiler with the main switch on:**

***Serious injuries possible due to automatic boiler startup!***

Before inspection and cleaning work in/on the boiler:

- ❒ Switch the boiler off by tapping “Boiler off”
  The boiler follows the shutdown procedure and switches to "Boiler off“ mode
- ❒ Allow boiler to cool for at least 1 hour
- ❒ Switch off the main switch and take precautions to prevent accidental switching on.

**⚠ WARNING**

**If non-permitted fuel types are used:**

***Non-standard fuels can cause serious faults in combustion (e.g. spontaneous combustion of carbonisation gases / flash fires) which can lead to serious accidents!***

Take the following precautions:

- ❒ Only use fuels specified in the "Permitted fuels" section of these operating instructions.

## 2.10 Emergency procedure

### 2.10.1 Overheating of the system

If the system overheats and the safety devices fail, proceed as follows:

**NOTICE! Do not under any circumstances switch off the main switch or disconnect the power supply.**

- ❒ Keep all the doors on the boiler closed
- ❒ Open all mixing valve taps, switch on all pumps.
  - ➥ The Froling heating circuit control performs this function in automatic operation.
- ❒ Leave the boiler room and close the door
- ❒ Open any available radiator thermostat valves

If the temperature does not drop:

- ❒ Contact the installer or Froling customer services
  ⇨ See "Addresses" [page 38]

### 2.10.2 Smell of flue gas

**DANGER**

**If you smell flue gas in the boiler room:**

***Inhaling toxic flue gas can be fatal!***

If you smell flue gas in the room where the boiler is installed:

- ❒ Keep all the doors on the boiler closed
- ❒ Shut down the boiler according to procedure
- ❒ Ventilate the room where the boiler is installed
- ❒ Close the fire door and doors to living areas

**Recommendation:** Do not install smoke alarms and carbon monoxide detectors near the system.

### 2.10.3 Fire in the system

**DANGER**

**In case of fire in the system:**

***Risk of death by fire and poisonous gases***

Emergency procedure in case of fire:

- ❒ Leave the boiler room
- ❒ Close the doors
- ❒ Inform the fire department

# 3 Operating the system

## 3.1 Assembly and initial startup

Assembly, installation and initial startup of the boiler must only be carried out by qualified staff, and these procedures are described in the accompanying assembly instructions.

**NOTICE! See assembly instructions for the**PE1 Pellet

**NOTICE**

**Optimum efficiency and efficient, low-emission operation can only be guaranteed if the system is set up by trained professionals and the standard factory settings are observed.**

Take the following precautions:

❒ Initial startup should be carried out with an authorised installer or with Froling customer services

The individual steps for initial start-up are explained in the operating instructions for the controller

**NOTICE! See operating instructions for boiler controller!**

The customer is responsible for ensuring the following prior to initial start-up of the system by Froling customer services:

- Electrical installation
- Installation of water pipes
- Flue gas connection including all insulation work
- Work must comply with local fire protection regulations

- It is essential that the electrician who has carried out the installation work is available when starting up the system for the first time to make any changes to the wiring which may become necessary.
- During initial start-up, operating staff are shown how to use the boiler. It is imperative for proper handover of the product that those involved are present as this is a one-off opportunity.

## 3.2 Filling the pellet store

**⚠ CAUTION**

**Filling the store when the boiler is switched on**

***could result in damage and consequential injury!***

When filling the fuel store:

❒ Switch off the boiler by tapping “Boiler OFF”

↳ The boiler follows the shutdown procedure and switches to "Boiler off" status

❒ Allow the boiler to cool for at least half an hour

When the boiler has cooled down:

❒ Before filling check the store for fines and clean if necessary

↳ Observe the general advice for working in the store.

⇨ See "General advice for working in the store" [page 21]

❒ Close all openings to the store to seal out dust

❒ Fill the store with pellets

↳ Only use permitted pellets

⇨ See "Permitted fuels" [page 10]

### 3.2.1 General advice for working in the store

| | |
|---|---|
|  | Risk of injury due to moveable parts!<br>Shut off the feeder unit before entering the store! |
|  | When cleaning the store an increased amount of dust may be generated. Wear a dust mask when working in the store. |
|  | Adequately ventilate the store before entering. Keep the door open and always have a second person present. Observe the CO concentration limit (< 30ppm). |
|  | Slick surfaces in the fuel store present a slipping hazard! |
|  | Unauthorised access prohibited! Keep children away!<br>Keep the fuel store locked and store the key in a safe place! |
|  | No fire, open flames or smoking in the store! |

## 3.3 Heating up the boiler

**NOTICE**

**Do not modify the factory settings!**

***Changing the system's factory settings can be detrimental to efficiency and emissions of the system.***

### 3.3.1 Switching on the power supply

❒ Turn on the main switch
- ➥ There is voltage at all of the boiler's components
- ➥ When the control has completed the system start, the boiler is ready for operation

### 3.3.2 Switching on the boiler


❒ Switch the boiler on by tapping “Boiler ON”
- ➥ Automatic mode is active
- ➥ The heating system is controlled via the controller according to the selected mode in automatic mode

❒ For other modes press the relevant function key
- ➥ Information on function keys in the relevant operating instructions of the boiler controller

### 3.3.3 Regulating the boiler

For the necessary steps, and how to display and alter parameters:

**NOTICE! See operating instructions for boiler controller!**

### 3.3.4 Switching off the boiler


❒ Switch boiler off by tapping “Boiler OFF”
- ➥ The boiler follows the shutdown program and switches to "Boiler off" status
- ➥ The combustion unit is switched off, the chamber discharge unit and the entire hydraulic system remain active

### 3.3.5 Switching off the power supply

❒ Turn off the main switch
- ➥ Boiler controller is switched off
- ➥ There is no power supply to any of the boiler components

**NOTICE! Frost protection function is no longer active!**

# 4 Boiler Servicing

## 4.1 General information on servicing

**DANGER**

**When working on electrical components:**

***Risk of electrocution!***

When work is carried out on electrical components:

- ❒ Only have work carried out by a qualified electrician
- ❒ Observe the applicable standards and regulations
  - ➥ Work must not be carried out on electrical components by unauthorised persons

**WARNING**

**When inspecting and cleaning the boiler with the main switch on:**

***Serious injuries possible due to automatic boiler startup!***

Before inspection and cleaning work in/on the boiler:

- ❒ Switch the boiler off by tapping “Boiler off”
  The boiler follows the shutdown procedure and switches to "Boiler off“ mode
- ❒ Allow boiler to cool for at least 1 hour
- ❒ Switch off the main switch and take precautions to prevent accidental switching on.

**WARNING**

**Incorrect inspection and cleaning:**

***Incorrect or insufficient inspection and cleaning of the boiler can cause serious faults in combustion (e.g. spontaneous combustion of carbonisation gases / flash fires) and this can lead to serious accidents and damage!***

Take the following precautions:

- ❒ Clean the boiler following the instructions in the instruction manual. Follow the boiler operating instructions.

**NOTICE**

**We recommend that you keep a maintenance book in accordance with ÖNORM M7510 of the Technical Directive for Fire Prevention (TRVB)**

## 4.2 Inspection and cleaning

### 4.2.1 Required tools and equipment

For carrying out cleaning and maintenance work the following tools and equipment are required:

- Furnace tool, cleaning brush for heat exchanger pipes (included in delivery)
- Only for PE1 Pellet 25-35: Mounting bracket for burner insert (included in delivery)
- Spanner or box wrench set
- Phillips screwdriver
- Set of Torx bits (T20, T25, T30)
- Small brush or cleaning brush
- Ash vacuum

### 4.2.2 Inspection

*Checking the system pressure*


❒ Check the system pressure on the pressure gauge

➥ The value must be 20% above the pre-stressed pressure of the expansion tank
**NOTICE! Check that the position of the pressure gauge and rated pressure of the expansion tank match your installer's specifications!**

If the system pressure decreases:

❒ Top up with water
**NOTICE! If this happens frequently, the seal of the heating system is faulty! Inform your installer**

If large pressure fluctuations are observed:

❒ Ask an expert to inspect the expansion tank

*Checking the safety valve*

❒ Check the seal of the safety valve regularly and ensure that the valve is not dirty
**NOTICE! Inspection work must be carried out in accordance with the manufacturer's instructions.**

### 4.2.3 Cleaning

The ash container must be emptied at appropriate intervals depending on energy requirements and fuel quality. The grate, burn-out tray and combustion chamber should also be checked at these intervals.

*Empty ash container*

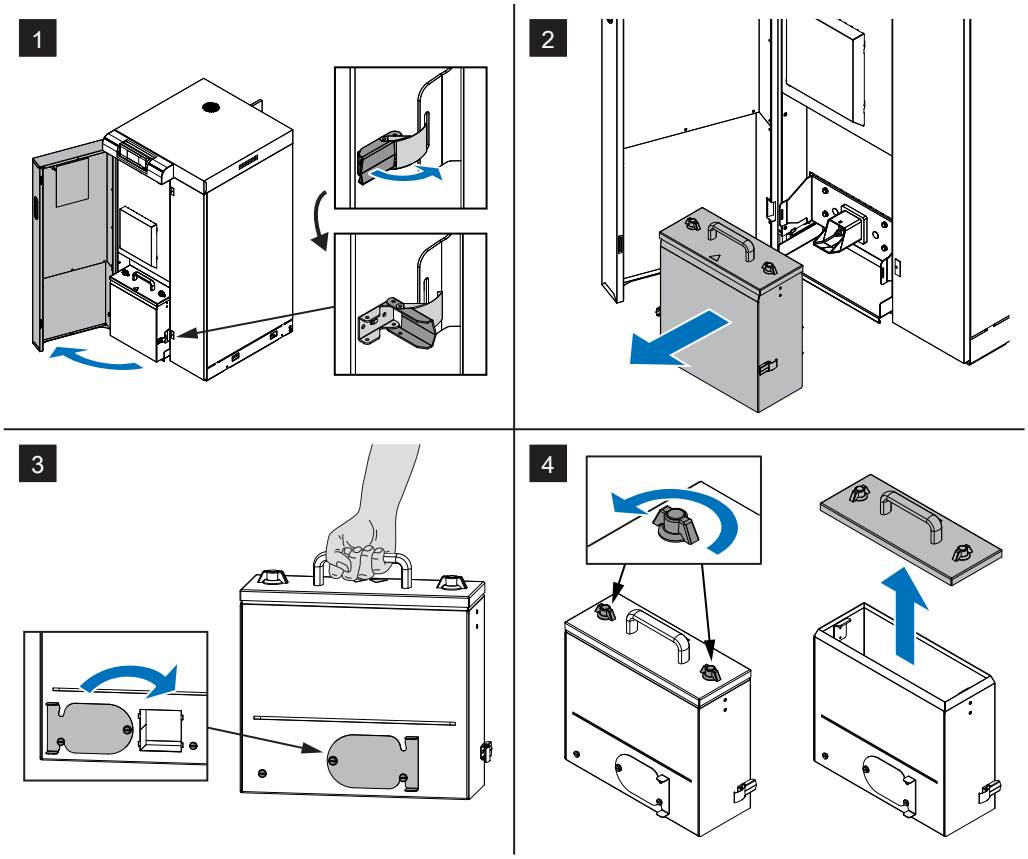


⇨ See "Disposal of the ash" [page 35]

*Cleaning the burn-out tray, burner insert and combustion chamber*

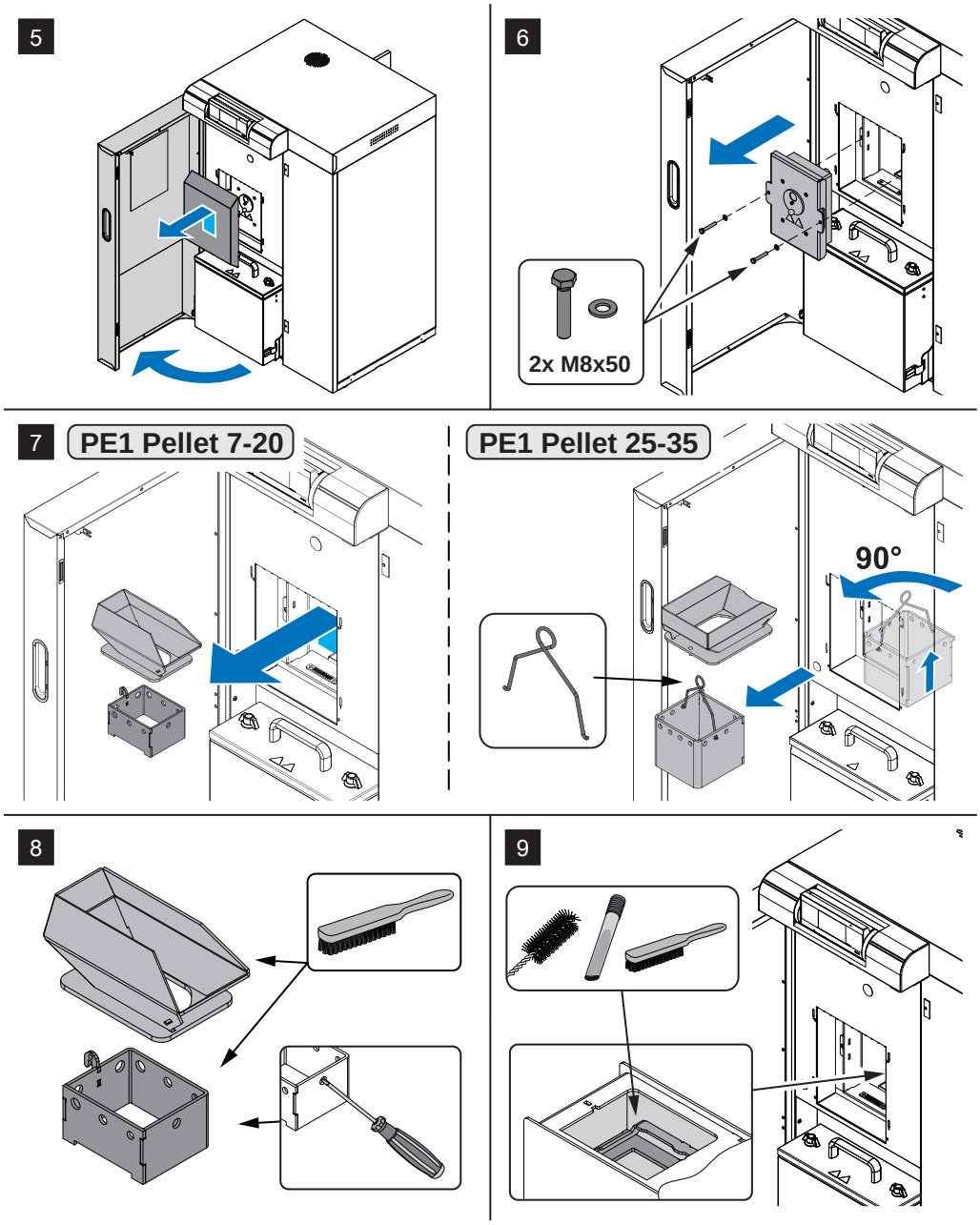

### 4.2.4 Periodic inspection and cleaning

The boiler must be cleaned and inspected at appropriate intervals depending on the service hours and fuel quality.

Annual cleaning and inspection (1500 to 2000 service hours) is usually sufficient. For fuels with a higher ash content (indicated by short emptying intervals for the ash container), the work should be carried out more frequently.

*Cleaning the heat exchanger*

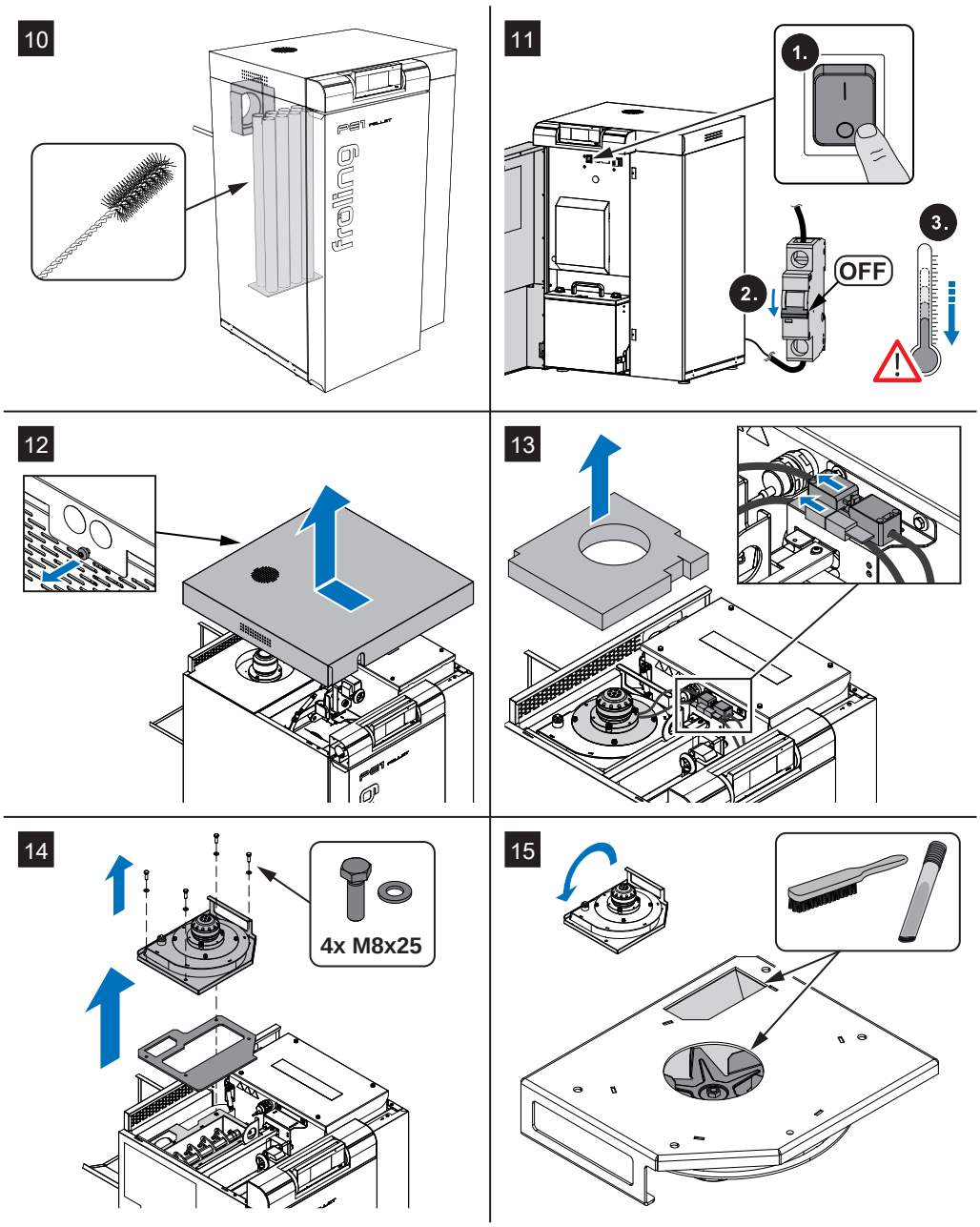

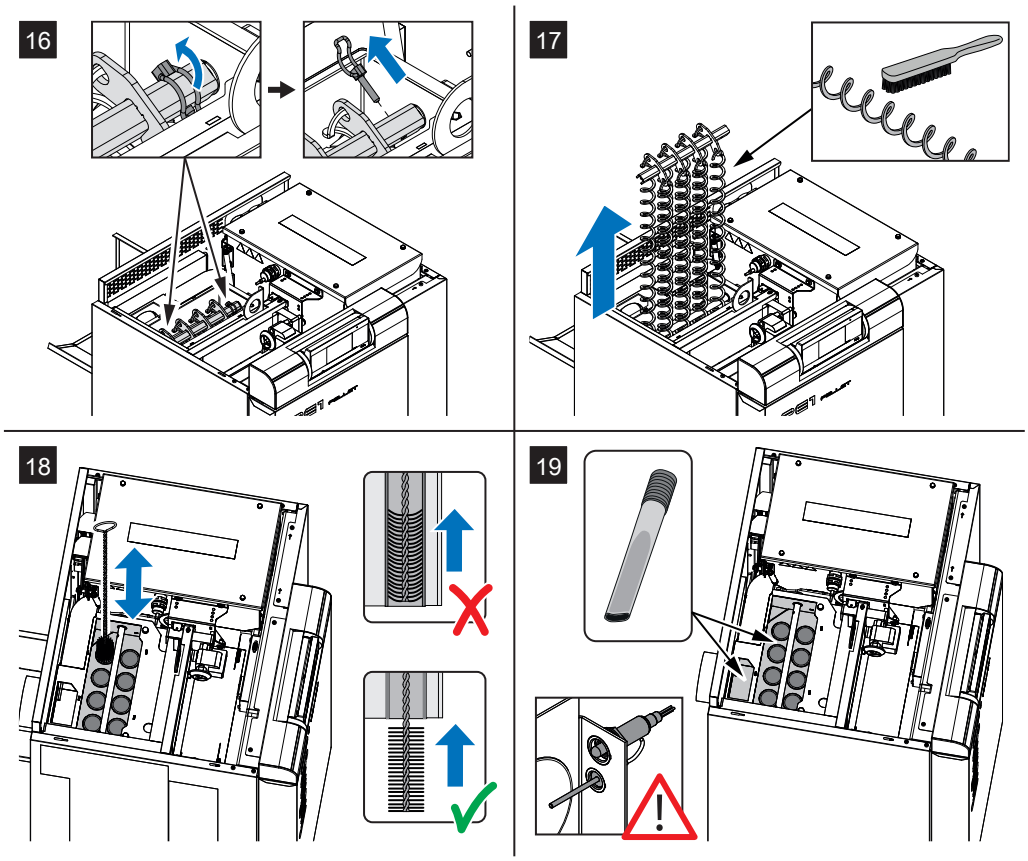


*Before starting the emissions measurement, the area of the ash screw must be thoroughly cleaned:*

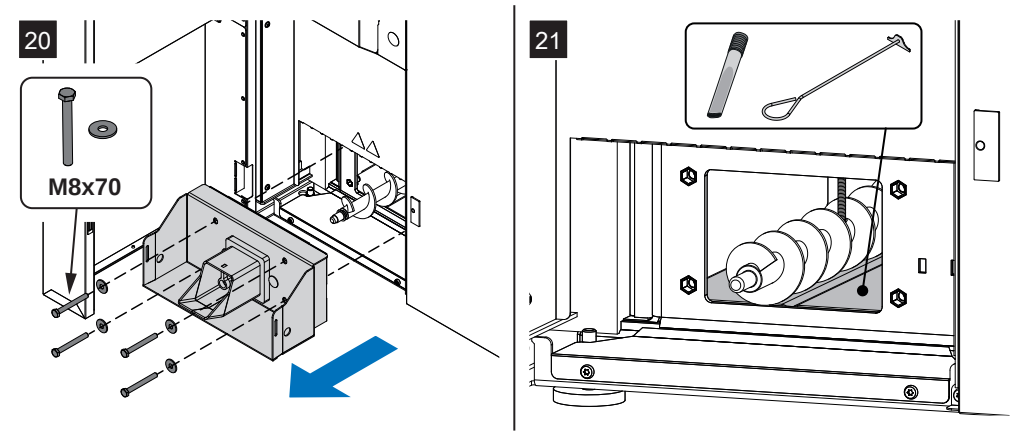

*Cleaning the combustion grate*

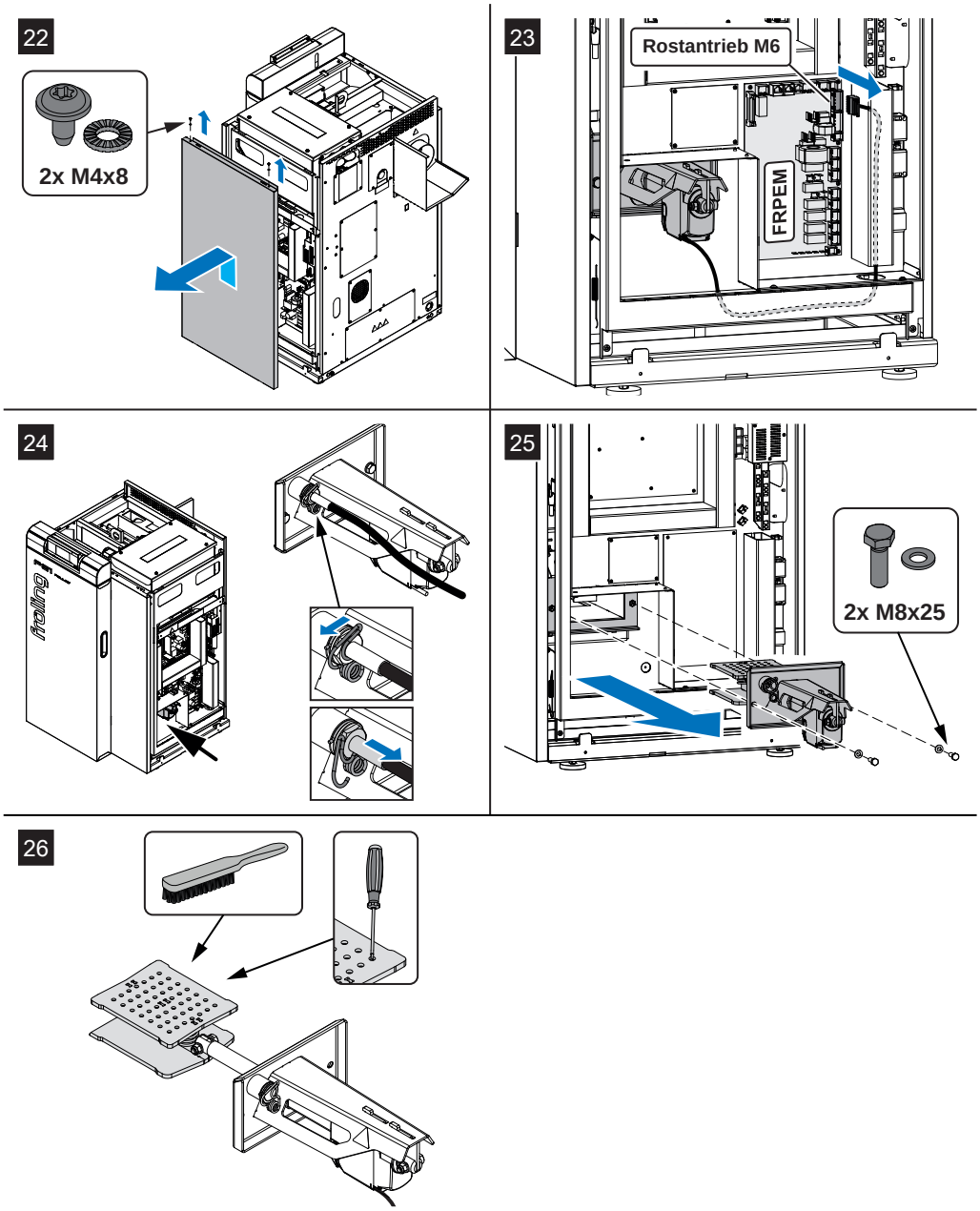


NOTICE! Small cracks and slight deformations on the grate are not indicative of a fault. After a thorough cleaning, the grate can be installed again.

### *Cleaning the measurement line of the underpressure controller*

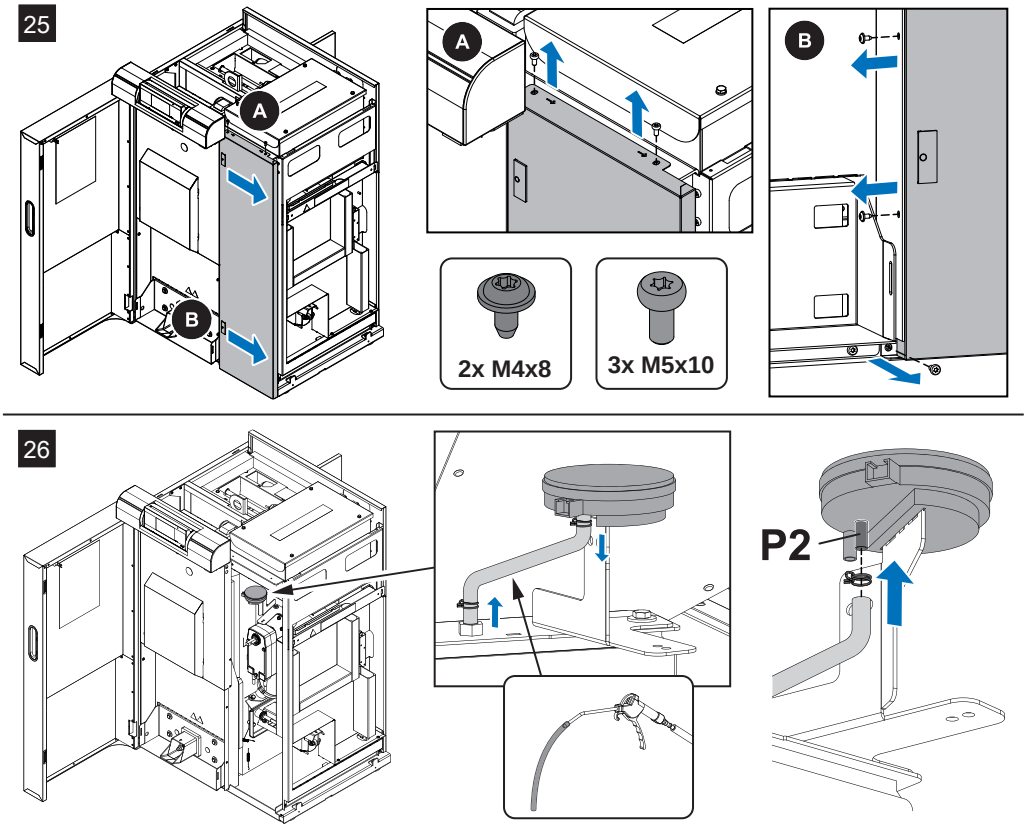


**CAUTION: Do not direct compressed air into differential pressure transmitter – risk of damage!**

### *Cleaning the flue gas pipe*

- ❒ Remove the inspection cover on the connecting pipe
- ❒ Clean the connecting pipe between the boiler and chimney with a chimney sweep's brush
  - ➥ Depending on the layout of the flue gas pipes and the chimney draught cleaning, yearly may not be enough!

### *Checking the draught controller flap*

- ❒ Check that the draught controller flap moves freely

### 4.2.5 Inspection and cleaning the DHW tank unit (optional)

The following tasks must only be carried out by a qualified technician. We recommend a yearly inspection / cleaning by Fröling customer services or by an authorised partner (third party maintenance) of Fröling Heizkessel- und Behälterbau GesmbH.

**NOTICE**

**Unless otherwise stipulated by local regulations, perform all maintenance work for drinking water systems in accordance with EN 1717 and EN 806.**

*Safety devices*

- ❒ Ensure the air outlet pipes on the safety valves are unobstructed
- ❒ Check that the safety devices on the heating system work correctly and in accordance with the manufacturer’s instructions
- ❒ Check that the hot water and drinking water (if fitted) safety valves work correctly and in accordance with the manufacturer’s instructions

*Pressure reducing valve*

- ❒ Check any existing pressure reducing valve for wear and correct function in accordance with the manufacturer's instructions

### *Magnesium corrosion protection anode*

The magnesium corrosion protection anode protects the domestic water tank from corrosion and is therefore depleted over time, depending on the aggressiveness of the water. It must therefore be replaced at regular intervals, so that the corrosion protection is retained.

**NOTICE! If the magnesium corrosion protection anode is not replaced in good time, it can lead to corrosion in the DHW tank.**

- ❒ Check the magnesium corrosion protection anode initially after 2 years and then annually in accordance with DIN 4753
- ❒ Check the magnesium corrosion protection anode with ammeter for wear
- ❒ Check the magnesium corrosion protection anode during the internal cleaning for wear after removal of the maintenance flange
  ⇨ See "Interior cleaning / removing limescale deposits" [page 33]
  - ➥ In the case of wear (loss of material thickness to 1/3 of the original diameter) the anode must be replaced

### *Check the magnesium corrosion protection anode with DC measuring device (e.g. multimeter, anode tester)*

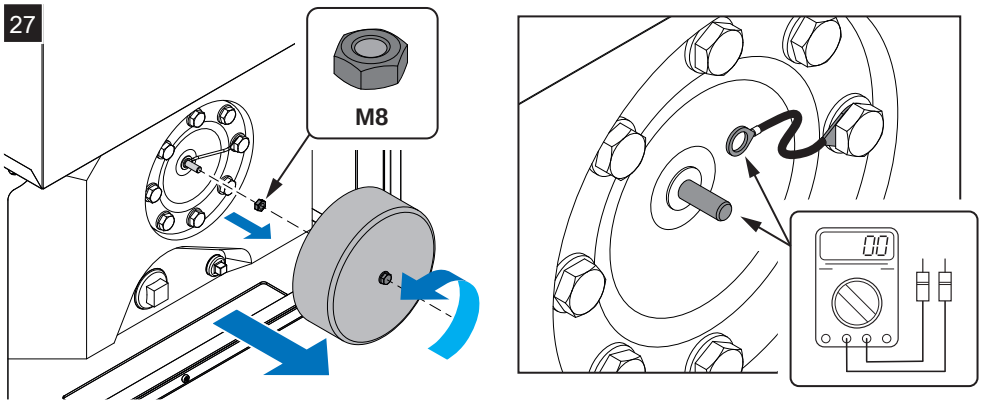


- ❒ Dismantle the cover by undoing the screw
- ❒ Undo nut on anode head
- ❒ Remove cable lug on anode head
- ❒ Install ammeter in series between anode and cable lug of storage tank
  - ➥ measured current greater than 1 mA => protective current sufficiently high, the anode is not yet consumed
  - ➥ measured current less than 1 mA or equals 0 => remove anode and check for wear

**WARNING! Use a suitable DC measuring device.**

**NOTICE! Set resolution of measuring range on the ammeter at the beginning to a high ampere rating in order to protect the device.**

**NOTICE! Observe the accuracy of the specified measuring range. The result can be checked again using a second device.**

### *Checking the stray current anode*

In contrast to magnesium corrosion protection anodes, a stray current anode has an almost unlimited service life, however, it must be checked for proper function one a year.

- ❒ Control lamp LED green => corrosion protection guaranteed
- ❒ Control lamp LED red => there is a fault on the stray current anode
  - ➥ Follow instructions in the operating manual for the stray current anode

## *Interior cleaning / removing limescale deposits*

Check the domestic hot water tank of the optional DHW tank unit annually for limescale deposits, and clean if necessary:

- ❒ Close cold water supply line, release pressure in system and open drainage on domestic hot water tank
  - ➥ Ensure it is vented by opening one of the valves in the drinking water supply system
- ❒ Remove the front cover of the DHW tank unit and maintenance flange of the domestic water tank
- ❒ Clean the domestic water tank inside with a jet of water
  - ➥ If necessary, remove harder residues with a wooden spatula, cleaning brush or limescale remover.
  - ➥ **Warning!** Do not use sharp, metal tools. Do not use descaling agents.
- ❒ Remove residual water or sludge residues with a wet vacuum
- ❒ Wipe interior surfaces with a sponge or rag
- ❒ Check magnesium protection anode and replace, if necessary
  ⇨ See "Magnesium corrosion protection anode" [page 32]

- ❒ When replacing, fit a new seal on maintenance flange

**NOTICE! Rinse DHW tank before starting up again in accordance with EN 14336**

- ❒ Clean the outer parts with a wet cloth whenever necessary
  - ➥ Avoid cleaning agents which are abrasive or contain solvents

## 4.3 Emissions measurement by chimney sweep or regulatory body

Various legal regulations stipulate that heating systems must be inspected periodically. In Germany this is regulated by the First Federal Emissions Protection Ordinance (BimSchV) in the last amended version, and in Austria by various state laws.

The following minimum requirements must be met by the operator of the system for a successful measurement:

- ❒ Thoroughly clean the boiler immediately before the measurement
- ❒ Only use fuels of high quality which meet the requirements as stipulated in the boiler operating instructions (“Permitted fuels” chapter)
- ❒ Ensure that there is adequate heat consumption on the day of the measurement. (e.g. storage tank must be able to take heat for the duration of the measurement)

### 4.3.1 Switch on the system

When the cleaning is complete:

- ❒ Reassemble all dismantled components in reverse order and check for tightness and correct installation

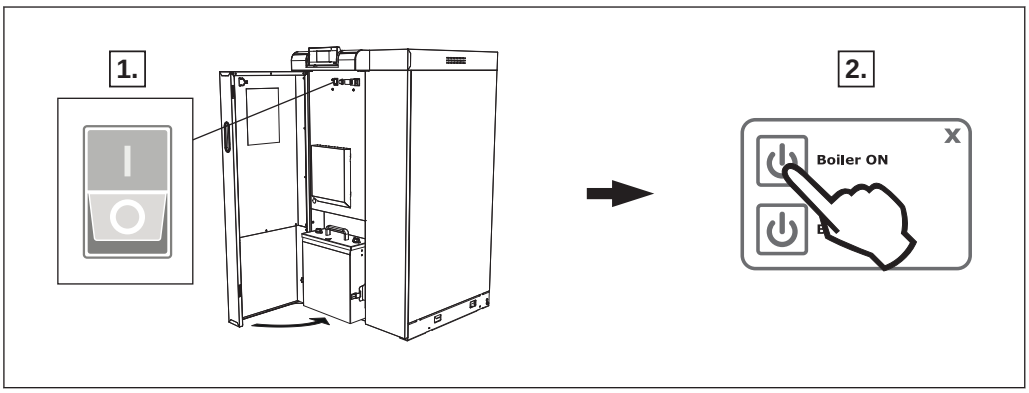


1. Turn on the main switch
2. Switch the boiler on by tapping “Boiler ON”

### 4.3.2 Emissions measurement by chimney sweep or regulatory body

Immediately before the start of the measurement:

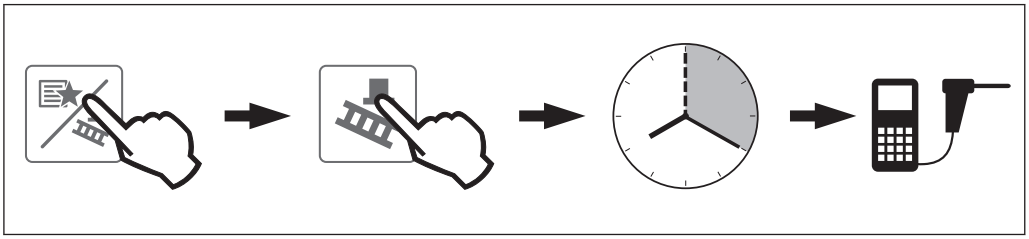

- ❒ Activate “Chimney-sweep mode” in the quick menu
  - ➥ The flue gas temperature and residual oxygen content should have stabilised approximately 20 minutes after activation
  - ➥ The display will indicate that the boiler is ready for measurement

## 4.4 Maintenance agreement / Customer service

**NOTICE! We recommend a yearly inspection by Froling customer services or an authorised partner (third party maintenance).**

Regular maintenance and servicing by a heating specialist will ensure a long, trouble-free service life for your heating system. It will ensure that your system stays environmentally-friendly and operates efficiently and cost-effectively.
In the course of this maintenance the entire system is inspected and optimised, particularly regulation and control of the boiler. The emission measurement carried out can also be used to draw conclusions about the combustion performance of the boiler. For this reason, FROLING offers a service agreement, which optimises operating safety. Please see the details in the accompanying guarantee certificate.

Your Froling customer service office will also be happy to advise you.

**NOTICE**

**All national and regional regulations relating to regular testing of the system must be observed. Please be advised that, in Austria, commercial systems with a rated heat output of 50 kW or more must be regularly tested at yearly intervals in accordance with the Heating Plant Regulations (Feuerungsanlagen-Verordnung).**

## 4.5 Replacement parts

With Froling original replacement parts in your boiler, you are using parts that match perfectly. As the parts fit together so well, installation times are shortened and a long service life is maintained.

**NOTICE**

**Installing non-original parts will invalidate the guarantee.**

❒ Only replace components or parts with original replacement parts

## 4.6 Disposal information

### 4.6.1 Disposal of the ash

*Austria:* ❒ dispose of ash in accordance with the Waste Management Act (AWG)

*Other countries:* ❒ dispose of ash in accordance with local regulations

### 4.6.2 Disposal of system components

❒ Ensure that they are disposed of in an environmentally friendly way in accordance with waste management regulations in the country (e.g. AWG in Austria)

❒ You can separate and clean recyclable materials and send them to a recycling centre.

# 5 Troubleshooting

## 5.1 General fault with power supply

| Error characteristics | Cause of error | Elimination of error |
|---|---|---|
| Nothing is shown on the display<br>No power to the controller | General power failure<br>Main switch is turned off<br>FI circuit breaker or line protection is switched off<br>Faulty fuse in the controller | <br>Turn on the main switch<br>Switch on the FI circuit breaker or line protection<br>Replace the fuse – note the amperage (6.3AT) |

### 5.1.1 Behaviour of system after a power failure

When the power supply has been restored, the boiler returns to the previous mode and is controlled according to the specified program.

- ❒ **After a power failure, check whether the STL (high-limit thermostat) has tripped.**
- ❒ **Keep the doors of the boiler closed during and after the power failure, at least until the induced draught fan automatically starts up again.**

EXCEPTION:

If the boiler operating status was "Heating up", "Pre-heating" or "Ignition" before the power failure, the boiler follows the shutdown procedure and cleaning commences. Only then does the boiler switch to "Preparation" operating status and the system starts up again.

## 5.2 Excessive temperature

The high-limit thermostat (STL) shuts down the boiler when it reaches a temperature of max. 100°C. The pumps continue to run.

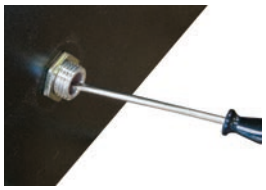

Once the temperature falls below approx. 75°C, the STL can be reset mechanically:

- ❒ Unscrew the cap on the STB (high-limit thermostat)
- ❒ Unlock the STL by pressing with a screwdriver

## 5.3 Faults with fault message

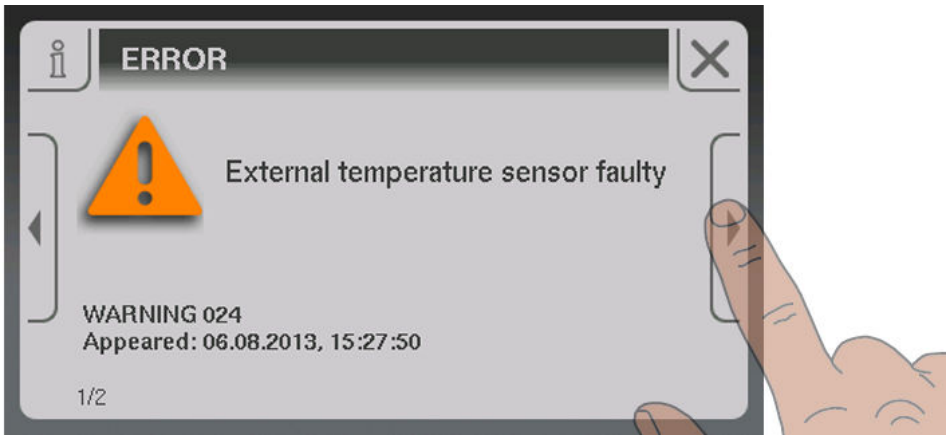


If a fault has occurred and has not yet been cleared:

❒ Status LED indicates the nature of the fault
- Orange flashing: Warning
- Red flashing: Error or alarm

❒ A fault message is shown on the display

The term "fault" is a collective term for warnings, errors and alarms. The boiler reacts differently to the three types of message:

| | |
|---|---|
| WARNING | In case of warnings the boiler initially continues controlled operation, giving the option of resolving the error quickly to prevent a shutdown. |
| ERROR | The boiler follows the shutdown procedure and remains in "Boiler off" status until the problem is resolved. |
| ALARM | An alarm triggers a system emergency stop. The boiler shuts down immediately, the heating circuit controller and pumps remain active. |

### 5.3.1 Procedure for fault messages

The procedure in the case of a fault message, the causes of faults and procedure for troubleshooting are described in the operating instructions for the boiler controller:

**IMPORTANT!** See operating instructions for boiler controller

### 5.3.2 Acknowledging a fault message

Trace and remove the fault and then:

❒ Tap the “Cancel” symbol

➥ Status LED constant or flashing green light (depending on operating status)
- Green constant: Boiler switched on
- Green flashing: Boiler switched off

# 6 Appendix

## 6.1 Addresses

### 6.1.1 Address of manufacturer

**FRÖLING**
**Heizkessel- und Behälterbau GesmbH**

**Industriestraße 12**
**A-4710 Grieskirchen**
**AUSTRIA**

TEL 0043 (0)7248 606 0
FAX 0043 (0)7248 606 600
EMAIL info@froeling.com
INTERNET www.froeling.com

*Customer service*

| | |
|---|---|
| Austria | 0043 (0)7248 606 7000 |
| Germany | 0049 (0)89 927 926 400 |
| Worldwide | 0043 (0)7248 606 0 |

### 6.1.2 Address of the installer

Stamp